NOTE:

1. DIMENSIONS ARE NOMINAL AND ARE IN INCHES.
2. DOOR & FRAME MANUFACTURERS ARE RESPONSIBLE FOR PROVIDING ADEQUATE CONSTRUCTION AND REINFORCEMENT OF HARDWARE SHOWN
3. DIMENSIONS ARE SUBJECT TO CHANGE WITHOUT NOTICE. USE ONLY CURRENT, APPROVED TEMPLATING.

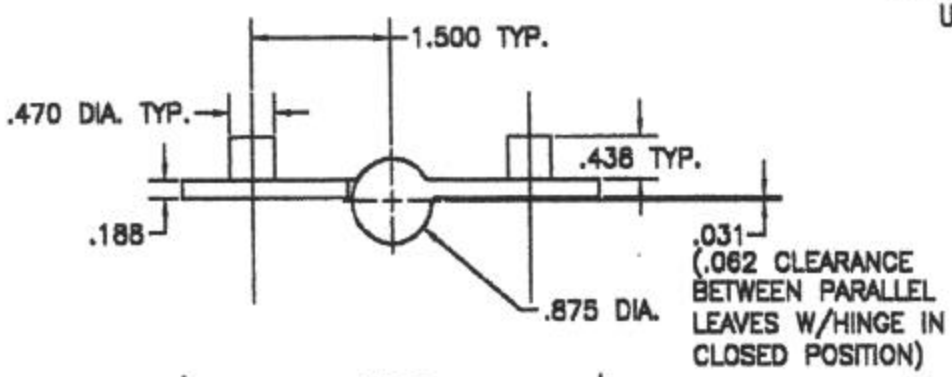

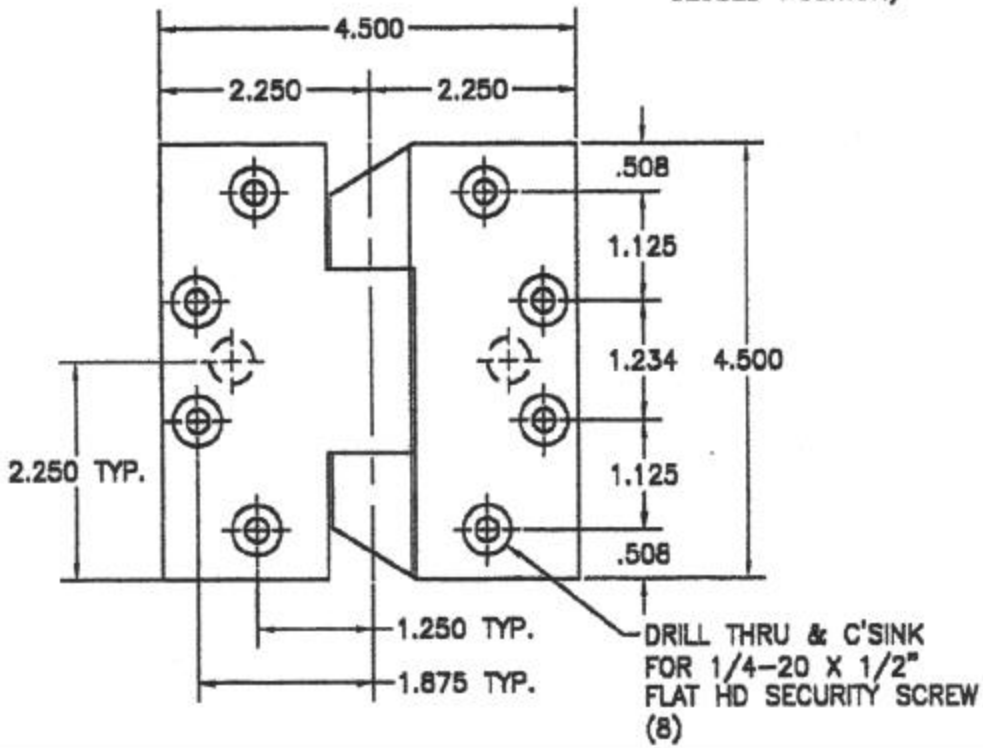

WEIZEL SECURITY
TEMPLATE, 45-125-SSH444 4 1/2" FULL MORTISE HINGE W/ SECURITY STUD
DATE: 7/30/03